"Hidden" Momentum in a Coaxial Cable

Kirk T. McDonald
Joseph Henry Laboratories, Princeton University, Princeton, NJ 08544
(March 28, 2002; updated September 15, 2018)

1 Problem

Calculate the electromagnetic momentum and identify the "hidden" mechanical momentum in a coaxial cable of length L, inner radius a, outer radius b, whose axis is the z-axis, when a battery of voltage V is connected to one end and a load resistor R_0 is connected to the other (at larger z). The current may be taken as flowing in the $+z$ direction inside the inner conductor (which has resistance R) and uniformly distributed over it. The outer conductor has negligible resistivity, and the current flows on it in a thin sheet at radius b. The battery has negligible internal resistance.

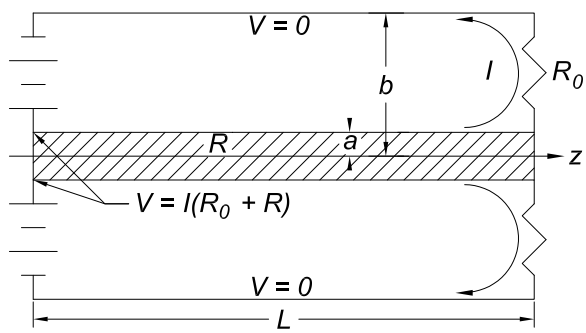

Deduce the charge per unit length on the outer surface of the inner conductor. Then, suppose the battery can be turned off in such a way that the current in the cable falls to zero with some time dependence $I(t)$. Calculate the impulse on the charge on the surface of the inner conductor due to the electric field induced by the transient current.

This problem is based on sec. 17 of [1], and on prob. 7.57, ex. 8.3 and ex. 12.12 of [2].[1] *The earliest discussion of it may be in sec. 29 of [8]. See the Appendix to [9] for a variant in which the above system is combined with three moving balls. The case of two parallel conducting wires is discussed in [10].*

2 Solution

2.1 Electromagnetic Fields and Field Momentum

We perform the analysis in the rest frame of the cable + battery + resistor, which we call the cable frame.

The total resistance of the cable plus (annular) load resistor is $R_0 + R$. To have current I in the system, the (annular-shaped) battery must have potential,

$$V = I(R_0 + R), \tag{1}$$

[1] The fields and Poynting vector found in sec. 2.1 below were discussed qualitatively by Heaviside on p. 212 of [3]; and on pp. 254-55 of the textbook [5], and quantitatively in [6]. See also [7].

at its circle of contact with the inner conductor. The current I, which returns along the outer conductor, causes a magnetic field $\mathbf{B}$ that is nonzero only inside the cable. This field is readily calculated via Ampère's law to be (in Gaussian units, and in a cylindrical coordinate system (r, ϕ, z) with the coaxial cable centered on the z axis),[2]

$$\mathbf{B}(z \text{ inside cable}) = \frac{2I}{c}\hat{\phi}\begin{cases} \frac{r}{a^2} & (r < a), \\ \frac{1}{r} & (a < r < b), \\ 0 & (r > b). \end{cases} \tag{2}$$

Inside the inner conductor the electric field is $\mathbf{E}(r < a, z \text{ inside cable}) = IR\,\hat{\mathbf{z}}/L$, as needed to drive the current I against the resistance R.[3] Since the tangential component of the electric field is continuous across a boundary, there must be some electric field in the region $r > a$ as well. Indeed, a charge distribution $Q(z)$ is needed on the surface of the inner conductor to shape the interior electric field to be purely longitudinal.

An analysis of the electric field can be based on the convention that the electric potential $V(r, z)$ is equal to zero on the outer conductor, and is also zero on the plane $z = 0$ (which is not necessarily inside the wire of length L). That is, we suppose the cable extends from $z = -L(1+R_0/R)$ (the position of the battery) to $z = -LR_0/R$ (the position of the resistor), so that the electric potential for $r \leq a$ can be written as,

$$V(r \leq a, z \text{ inside cable}) = -\frac{IRz}{L}\,. \tag{3}$$

Thus, the potential of the inner conductor at the position of the load resistor is IR_0, and the potential at the connection of the battery to the inner conductor is $I(R_0 + R)$, *i.e.*, the battery voltage (1).

The capacitance per unit length between the inner and outer conductors of the coaxial cable is well known to be,

$$C = \frac{1}{2\ln(b/a)}\,. \tag{4}$$

The charge $Q(z)$ per unit length on the inner conductor (with charge -$Q(z)$ per unit length on the outer conductor) is therefore,

$$Q(z) = CV(r = a, z) = -\frac{IRz}{2L\ln(b/a)} = \frac{IRz}{2L\ln(a/b)}\,, \tag{5}$$

assuming that $L \gg b$ so that $Q(z)$ is essentially constant over length $\Delta z \ll b$.[4] Further, the potential in the region $a < r < b$ is essentially that for a long wire of charge density $Q(z)$

[2] If $R = 0$ the current flows on the surface of the inner conductor and $\mathbf{B} = 0$ for $r < a$.

[3] If we ignore the resistance R of the inner conductor (as will be done in sec. 2.3 below), a simplified analysis can be made. The battery can be taken to lie in the plane $z = 0$ and the resistor in the plane $z = L$. For the outer conductor at zero potential, the inner conductor ($r \leq a, 0 \leq z \leq L$) has $V_0 = IR_0 = V_{\text{battery}} = V_{\text{resistor}}$, and the electric field is nonzero only inside the cable, ($a < r < b, 0 \leq z \leq L$), where it has only the (positive) radial component $E_r = V_0/r\ln(b/a) = -V_0/r\ln(a/b)$. The potential in this region is $V = V_0\ln(r/b)/\ln(a/b)$. The inner conductor has charge $Q = V_0/2\ln(b/a)$ per unit length on its surface.

[4] A circuit in the form of a square of edge length L, with battery of potential difference V on one edge

per unit length, matched to the condition that $V(r=b)=0$, namely,

$$V(a<r<b,z) = -2Q(z)\ln(r/b) = -\frac{IRz\ln(r/b)}{L\ln(a/b)}\,, \tag{6}$$

which also matches eq. (3) at $r=a$. The potential (6) can also be obtained by a separation-of-variables solution to Laplace's equation [1, 6].

The electric field is obtained by taking the gradient of eq. (6), and we find,

$$\mathbf{E} = \frac{IR}{L}\begin{cases} \hat{\mathbf{z}} & (r<a), \\ \frac{\ln(r/b)}{\ln(a/b)}\hat{\mathbf{z}} + \frac{z}{r\ln(a/b)}\hat{\mathbf{r}} & (a<r<b), \\ 0 & (r>b). \end{cases} \tag{7}$$

The electromagnetic momentum density is,

$$\mathbf{p}_{\rm EM} = \frac{\mathbf{S}}{c^2} = \frac{\mathbf{E}\times\mathbf{B}}{4\pi c} = \frac{I^2R}{2\pi c^2 L}\begin{cases} -\frac{r}{a^2}\hat{\mathbf{r}} & (r<a), \\ -\frac{\ln(r/b)}{r\ln(a/b)}\hat{\mathbf{r}} + \frac{z}{r^2\ln(a/b)}\hat{\mathbf{z}} & (a<r<b), \\ 0 & (r>b). \end{cases} \tag{8}$$

The Poynting vector $\mathbf{S}$ quantifies the flow of energy from the battery in the region ($a<r<b, z=-L-R_0/R$) to the inner conductor and to the load resistor, where the energy is dissipated in Joule heating.

The figure below (from [1]) shows lines of electric field and of Poynting flux in a coaxial cable that has no terminating resistor, but rather is symmetric about the origin and with power sources at both ends. The example considered here corresponds to, say, the left third of the figure, plus a terminating resistive plate; the power source is at the left of the figure.

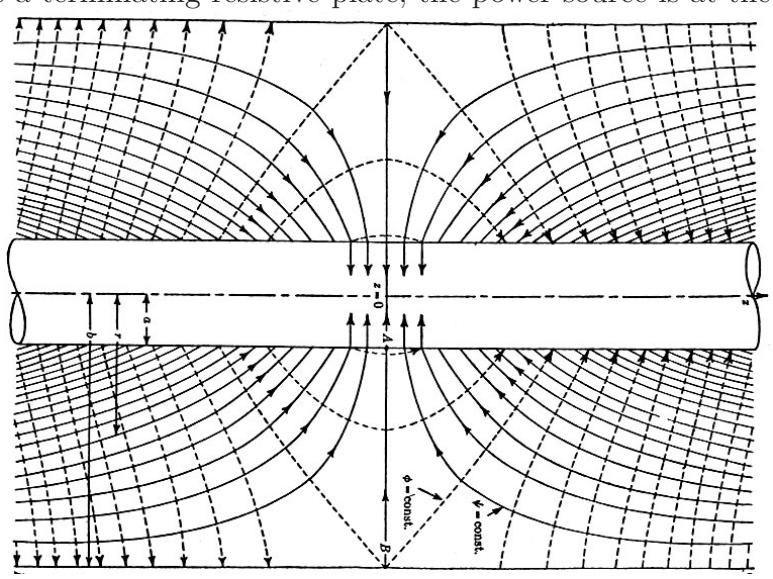

and load resistor R_0 on the opposite edge, could be approximated by a coaxial cable of outer radius $b=L$. In this case the charge per unit length (5) implies that a wire segment of length L would have surface charge density $Q/2\pi a \approx -IRz/4\pi aL\ln(L/a) \to -\epsilon_0 IRz/aL\ln(L/a)$, where R is the electrical resistance of that segment, and the latter form holds in SI units. This result was first deduced in 1852 by Weber, secs. 28-36 of item X in [11]. See also sec. 6.2 and Appendix A of [12].

The total electromagnetic momentum $\mathbf{P}_{\rm EM}$ in the cable is,

$$\mathbf{P}_{\rm EM} = \int \mathbf{p}_{\rm EM}\ d{\rm Vol} = \frac{I^2 R\ \hat{\mathbf{z}}}{2\pi c^2 L \ln(a/b)} \int_a^b 2\pi r\ dr \int_{-L(1+R_0/R)}^{-LR_0/R} dz \frac{z}{r^2} = \frac{I^2 L(R_0 + R/2)}{c^2}\ \hat{\mathbf{z}}. \quad (9)$$

2.2 Analysis of Transient Forces on the System in the Cable Frame

A confirmation of the result (9) for the electromagnetic field momentum $\mathbf{P}_{\rm EM}$ can be found by supposing the current rises from zero to the final value I with time. The changing magnetic field induces a longitudinal electric field that pushes on the charges on the surface of the inner conductor. The force on the conduction electrons opposes the current, which transfers the force to coaxial cable.

By Faraday's law for a rectangular loop in the r-z plane with two of its edges at $r = a$ and b, the induced electric field at $r = a$ is[5]

$$E_{z,\rm induced}(r = a) = -\frac{1}{c}\frac{d}{dt}\int_a^b B_\phi\ dr = -\frac{2}{c^2}\frac{dI}{dt}\ln(b/a), \quad (11)$$

noting that $E_{z,\rm induced}(r = b) = 0$ since the outer (perfect) conductor can support no tangential electric field. The additional force on the surface charge on the inner conductor is,

$$F_{z,\rm induced} = \int_{-L(1+R_0/R)}^{-LR_0/R} Q(z) E_{z,\rm induced}(r = a)\ dz = -\frac{L(R_0 + R/2)}{c^2}\frac{dI}{dt}, \quad (12)$$

using eq. (5). The momentum kick to the wire as the current increases from zero to I is therefore,

$$\Delta\mathbf{P}_{\rm mech} = \hat{\mathbf{z}} \int F_{z,\rm induced}\ dt = -\frac{I^2 L(R_0 + R/2)}{c^2}\hat{\mathbf{z}} = -\mathbf{P}_{\rm EM}. \quad (13)$$

Thus, the back reaction to the process of emission of the electromagnetic energy into the coaxial cable results in a very small mechanical momentum of the cable as a whole in the direction opposite to the energy flow.

This result reinforces the interpretation of eq. (9) as field momentum stored in the system, that could be converted to back into mechanical momentum when the current drops to zero.

In the rest of this note, we set to zero the resistance R of the inner conductor, such that the field momentum (9) becomes more simply,

$$\mathbf{P}_{\rm EM} = \frac{I^2 R_0 L}{c^2}\ \hat{\mathbf{z}}. \quad (14)$$

[5] Alternatively, we can use Faraday's law in differential form,

$$(\boldsymbol{\nabla} \times \mathbf{E}_{\rm induced})_\phi = \frac{\partial E_{r,\rm induced}}{\partial z} - \frac{\partial E_{z,\rm induced}}{\partial r} = -\frac{1}{c}\frac{\partial B_\phi}{\partial t} = -\frac{2\dot{I}}{c^2 r} \qquad (a < r < b). \quad (10)$$

There will be no radial component to the induced field, so eq. (10) integrates to the form (11) after enforcing the condition that $E_{z,\rm induced}(r = b) = 0$.

2.2.1 Mass Transfer via the Poynting Vector

Jon Thaler (private communication, Aug. 26, 2007) reminds us that the present example is very close to that considered by Einstein in 1905 [13] from which he deduced that the emission of light of energy U lowers the mass of the emitting body according to,[6]

$$U = \Delta mc^2. \tag{15}$$

Here, the mass of the battery is reduced as the electromagnetic field carries energy away to the resistive inner conductor and the load resistor. As the latter absorb the energy their masses increase (ignoring possible thermal transport of the absorbed energy). Hence, the mass of the system at positive z is increasing with time (in the cable frame = rest frame of the battery + cable + load resistor), which implies that the cable must move in the negative-z direction with respect to the lab frame, such that the center of mass/energy remains fixed in the lab frame.

This argument also suggests that the momentum kick (13) is associated with this motion of the cable with respect to the lab frame, and we can write that the velocity $\mathbf{v}^\star_{\rm cable}$ in the lab frame (in which quantities will be designated with a superscript *) is,

$$\mathbf{v}^\star_{\rm cable} = -\frac{I^2 R_0 L}{Mc^2}\hat{\mathbf{z}} = -\frac{\mathbf{P}_{\rm EM}}{M}\,, \tag{16}$$

where M is the total mass/energy of the system.

2.2.2 Could the System Contain "Hidden" Momentum?

While the discussion of sec. 2.2.1 appears to resolve the issue of a mechanical momentum equal and opposite to the field momentum $\mathbf{P}_{\rm EM}$, there is a more subtle possibility that the system contains so-called "hidden" momentum, which term was coined by Shockley [15], but which concept remains somewhat controversial [2, 16]-[28].

General considerations of energy and momentum in (sub)systems lead to a definition of "hidden" momentum [29] that is reviewed in secs. 2.4 and 3.2 below, and which provides two equivalent methods of computing its value. When the second (less intuitive) of these methods is applied to the present example, as in sec. 3.2 below, one readily finds that the matter subsystem contains a "hidden" momentum equal and opposite to the field momentum (14).

However, if one attempts to approach the possibility of "hidden" momentum in the present example more directly, using the first definition,

$$\mathbf{P}_{\rm hidden} = \mathbf{P} - M\bar{\mathbf{v}}_{\rm ce}, \tag{17}$$

for a subsystem that has no "boundaries", and where M is its mass/energy, and $\bar{\mathbf{v}}_{\rm ce}$ is the "macroscopic" velocity of its center of mass/energy, then the story is more complicated.[7]

[6] This point was also recently made by Timothy Boyer (private communication, Sept. 21, 2007), and [14].

[7] "Hidden" momentum is a "macroscopic" concept. If one considers the "microscopic" view in sufficient detail, one might hope that the (macroscopic) "hidden" momentum will always be explained without need for terms like "hidden". However, electrons, which have a nonzero magnetic moment, can be said to contain "hidden" momentum, which so far has defied any classical "microscopic" explanation, as seems rather to be a quantum effect. One could argue [30] that in classical electrodynamics without permanent magnetization, there is no "hidden" momentum in a "microscopic" view.

Since the field momentum (14), and a possible equal-and-opposite "hidden" mechanical momentum, are quantities of order $1/c^2$, they are unobservably small in examples like the present, and their consideration could be "much ado about (almost) nothing".

Hence, Many readers may be content to skip the rest of this note.

2.2.3 Could the Electric Current Contain "Hidden" Momentum?

In certain (somewhat artificial) examples [17, 25, 31], the electric currents contain "hidden" momentum.

This is perhaps surprising, in that while there is internal motion associated with the electrical current, we (naïvely) expect the net momentum of the current to be zero, since the steady current density $\mathbf{J} = ne\mathbf{v}$ obeys,

$$0 = \int \mathbf{J}\, d\mathrm{Vol} = \int ne\mathbf{v}\, d\mathrm{Vol} = \frac{e}{m}\int nm\mathbf{v}\, d\mathrm{Vol} = \frac{e}{m}\int \mathbf{p}_{\mathrm{electrons}}\, d\mathrm{Vol} = \frac{e}{m}\mathbf{P}_{\mathrm{electrons}}, \quad (18)$$

where n is the number density of conduction electrons of mass m, charge $e < 0$ and velocity $\mathbf{v}$, $\mathbf{p}_{\mathrm{charges}}$ is the momentum density of these conduction electrons, and $\mathbf{P}_{\mathrm{electrons}}$ is their total momentum.[8]

However, the conduction electrons do not necessarily all have the same speed v, such that their "relativistic" mass $m = \gamma m_0 = m_0/\sqrt{1 - v^2/c^2}$, where m_0 is the rest mass of an electron, is not the same for all electrons, and the total momentum $\mathbf{P}_{\mathrm{charges}}$ could be nonzero. If so, this nonzero momentum could be called a "hidden" momentum.

However, in examples like the present, which include a battery and resistor, the electric current does not contain "hidden" momentum.

2.3 In Pursuit of "Hidden" Momentum in the Cable Frame

We return to the steady-state example, and continue the analysis in the cable frame (in which the battery + cable + resistor is at rest).

As a first step towards identification of possible "hidden" momentum, we compute the momenta and velocity of the center of mass/energy of various subsystems.

For simplicity, we now suppose that both conductors of the coaxial cable have zero resistance (with the battery at $z = 0$ and the resistor at $z = L$; see footnotes 2 and 3), in which case the electromagnetic field momentum $\mathbf{P}_{\mathrm{EM}}$ is given by eq. (14).

We consider the system to consist of three subsystems:

1. The EM subsystem, consisting of the macroscopic electromagnetic fields, which are nonzero only in the volume $(a < r < b, 0 < z < L)$. However, formally the EM subsystem extends over all space.

2. The "matter" subsystem, consisting of the "matter" of the battery + cable + resistor, as well as the microscopic electromagnetic fields of all these items, but not the moving

[8] Since the charge of an electron is negative, the velocity of a conduction electron is opposite to the direction of the electrical current I, sketched in the figure on p. 1.

(conduction) electrons of the electrical current.[9,10] Formally, the matter subsystem extends over all space.

3. The "electron" subsystems, consisting of only the moving (conduction) electrons.

These subsystems have mass/energy densities $u_{\rm EM}$, $u_{\rm matter}$ and $u_{\rm electrons}$,[11] such that the total energies of the subsystem$i$ is,

$$U_i = \int u_i \, d{\rm Vol} \equiv M_i c^2, \tag{19}$$

and the centers of mass/energy of the subsystem i is,

$$\mathbf{x}_i = \frac{\int u_i \, \mathbf{x} \, d{\rm Vol}}{U_i}. \tag{20}$$

This example involves an electrical current, which we consider to consist of moving charges in a microscopic view, but which is a steady current in the macroscopic view.

Quantities, *i.e.*, v, whose macroscopic value differs from its microscopic value are denoted with a bar, *i.e.*, $\bar{v}$, in the following.

Velocity of the Macroscopic Electromagnetic Center of Energy

The electromagnetic fields $\mathbf{E}$ and $\mathbf{B}$ that we consider (associated with the electrical currents in the battery + wires + resistor) are macroscopic quantities, averaged over small volumes of atoms.

The macroscopic electromagnetic-field-energy density of the system is constant over time, so the velocity of the center of energy of the macroscopic electromagnetic field in the cable frame is zero,

$$\bar{\mathbf{v}}_{\rm ce,EM} = \frac{d\bar{\mathbf{x}}_{\rm ce,EM}}{dt} = 0, \qquad \bar{\mathbf{x}}_{\rm ce,EM} = {\rm const} = \frac{L}{2}\,. \tag{21}$$

For the electromagnetic subsystem as defined here, *i.e.*, the fields associated with the electrical currents, we may say that the microscopic velocity of its center of mass/energy is the same as the macroscopic velocity,

$$\mathbf{v}_{\rm ce,EM} = \bar{\mathbf{v}}_{\rm ce,EM} = 0. \tag{22}$$

As noted earlier, the momentum of the EM subsystem is nonzero, as given by eq. (14). This momentum is the same on both macroscopic and microscopic scales.

Velocity of the Macroscopic Center of Mass/Energy of the Matter Subsystem

[9]The electrical current is electrically neutral on the macroscopic scale. Hence, the matter subsystem has net positive electric charge.

[10]We count any chemical, elastic or thermal energy densities in the system, $u_{\rm chemical}$, $u_{\rm elastic}$ or $u_{\rm thermal}$, with effective mass densities $u_{\rm chemical}/c^2$, $u_{\rm elastic}/c^2$ and $u_{\rm thermal}/c^2$, as part of the "matter".

[11]The mass density $\rho_{\rm matter}$ contributes $\rho_{\rm matter}c^2/\sqrt{1-v^2/c^2}$ to the energy density $u_{\rm matter}$, where v is the velocity of the mass element.

On the macroscopic scale, all matter of the "matter" subsystem is at rest, so its macroscopic momentum is zero,

$$\bar{\mathbf{P}}_{\text{matter}} = 0. \tag{23}$$

However, the macroscopic center of mass/energy of the matter subsystem is moving because the electromagnetic field transfers energy from the battery to the resistor at rate $dU_{\text{resistor}}/dt = I^2 R_0 = -dU_{\text{battery}}/dt$, while the total energy U_{matter} is constant. Hence,

$$\bar{\mathbf{v}}_{\text{ce,matter}} = \frac{d\bar{\mathbf{x}}_{\text{ce,matter}}}{dt} = \frac{\mathbf{x}_{\text{battery}} \frac{dU_{\text{battery}}}{dt} + \mathbf{x}_{\text{resistor}} \frac{dU_{\text{resistor}}}{dt}}{U_{\text{matter}}} = \frac{I^2 R_0 L}{U_{\text{matter}}} \hat{\mathbf{z}} = \frac{I^2 R_0 L}{M_{\text{matter}} c^2} \hat{\mathbf{z}}, \tag{24}$$

recalling that $z_{\text{battery}} = 0$ and $z_{\text{resistor}} = L$. Thus,

$$M_{\text{matter}} \bar{\mathbf{v}}_{\text{ce,matter}} = \frac{I^2 R_0 L}{c^2} \hat{\mathbf{z}} = \mathbf{P}_{\text{EM}} = \bar{\mathbf{P}}_{\text{EM}} \qquad \text{(macroscopic)}. \tag{25}$$

That is, the momentum associated with $\bar{\mathbf{v}}_{\text{ce,matter}}$ is not strictly mechanical, but could be regarded as electromagnetic, since energy in the battery is converted to field energy, which is transported by the field to the resistor, where it is converted back into mechanical energy.

One might say that there is something "hidden" about momentum in this example.

In particular, we have not considered the momentum associated with the electrical current, which momentum (if nonzero) is a microscopic effect, not considered in the macroscopic accounting that led to eq. (25).

Velocity of the Macroscopic Center of Mass/Energy of the Electron Subsystem

On a macroscopic scale larger than the distance between adjacent conduction electrons, their density is constant in time (in the cable frame). Hence, the velocity of the macroscopic center of mass/energy of the electron subsystem is zero,[12]

$$\bar{\mathbf{v}}_{\text{ce,electrons}} = 0 \qquad \text{(macroscopic)}. \tag{26}$$

[12]The nonzero velocity of the moving electrons is observable only at the microscopic level. Associated with this nonzero velocity is a microscopic motion of the position $\mathbf{x}_{\text{ce,electrons}}$ of the center of mass/energy of the moving electrons. In particular, when electrons enter/leave the inner or outer conductor, the microscopic center of mass/energy of the electrons is "instantaneously" shifted in z by amount d/nL where d is the spacing between the moving electrons. Consequently, the microscopic coordinate $z_{\text{ce,electrons}}$ of the center of mass/energy of the moving electrons executes a *Zitterbewegung* such that the microscopic velocity $\mathbf{v}_{\text{ce,electrons}}$ of the center of mass/energy is nonzero, while the (time-averaged) macroscopic center of mass/energy, $\bar{z}_{\text{ce,electrons}}$, of the electrons is at rest (at $z = L/2$).

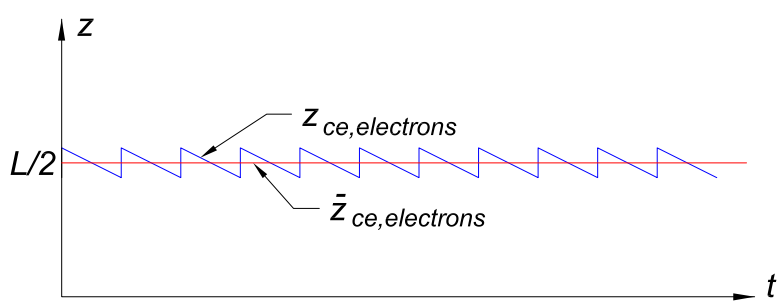

The velocity of the conduction electrons is constant inside the inner and outer conductors, which have zero resistance. On a macroscopic scale larger than the mean free path of electrons inside the resistor, the electron velocity is also constant.

The battery requires more discussion. If the only force on conduction electrons (of charge $e < 0$) inside the battery were that due to the electric field $\mathbf{E}_{\rm batt}$ (which points radially outward) they would flow from the outer conductor through the battery to the inner conductor. This is opposite to the direction of flow in the rest of the circuit. Hence, we infer that the battery exerts a force on the electrons opposite to that from the electric field, so the net force on the electrons is zero, and the move with constant (macroscopic) velocity inside the battery. Thus, there is no way that the macroscopic speed of conduction electrons can differ between the battery, the inner and outer conductors, and the resistor. In sum, the total macroscopic momentum of the electron subsystem is zero,

$$\bar{\mathbf{P}}_{\rm electrons} = 0. \tag{27}$$

Velocity $\bar{\mathbf{v}}_{\rm ce}$ of the Macroscopic Center of Mass/Energy of the Entire System

The macroscopic velocity $\bar{\mathbf{v}}_{\rm ce}$ of the entire system, with respect to the cable frame, is not zero (recalling els. (21) and (25)),

$$\begin{aligned} M\bar{\mathbf{v}}_{\rm ce} &= M_{\rm EM}\bar{\mathbf{v}}_{\rm ce,EM} + M_{\rm matter}\bar{\mathbf{v}}_{\rm ce,matter} + M_{\rm electrons}\bar{\mathbf{v}}_{\rm ce,electrons} = M_{\rm matter}\bar{\mathbf{v}}_{\rm ce,matter} \\ &= \bar{\mathbf{P}}_{\rm EM} = \frac{I^2 R_0 L}{c^2}\,\hat{\mathbf{z}} \qquad \text{(macroscopic)}. \end{aligned} \tag{28}$$

Although the coax/battery/resistor are not moving in the cable frame, the macroscopic center of mass/energy $\bar{\mathbf{v}}_{\rm ce}$ of the entire system has a tiny velocity, calculable but not observable as a motion of matter in the system. Indeed,

$$\bar{\mathbf{v}}_{\rm ce} = \frac{U_{\rm EM}\,\bar{\mathbf{v}}_{\rm ce,EM} + U_{\rm matter}\,\bar{\mathbf{v}}_{\rm ce,matter}}{U_{\rm EM} + U_{\rm matter}} \approx \frac{I^2 R_0 L}{U_{\rm matter}}\,\hat{\mathbf{z}} = \bar{\mathbf{v}}_{\rm ce,matter}\,, \tag{29}$$

noting that $U_{\rm EM} \ll U_{\rm matter}$.

An immediate consequence of eq. (28) is that the macroscopic position $\bar{z}_{\rm ce}$ of the center of mass/energy of the entire system in the cable frame varies linearly in z with time,

$$\bar{z}_{\rm ce} = \bar{z}_0 + \bar{v}_{\rm ce} t \qquad \text{(macroscopic)}. \tag{30}$$

The macroscopic momentum of the entire system in the cable frame is,

$$\bar{\mathbf{P}} = \bar{\mathbf{P}}_{\rm EM} + \bar{\mathbf{P}}_{\rm matter} + \bar{\mathbf{P}}_{\rm electrons} = \bar{\mathbf{P}}_{\rm EM} \qquad \text{(macroscopic)}. \tag{31}$$

Relation between the Cable and Lab Frames

In the lab frame, the microscopic velocity $\mathbf{v}_{\rm ce}$ of the center of mass/energy of the entire system is zero (by definition of the lab frame), which implies that the macroscopic velocity $\bar{\mathbf{v}}_{\rm ce}$ of the center of mass/energy of the entire system is also zero. From this, we deduce that the cable frame has velocity $\mathbf{v}^\star_{\rm cable} = -\bar{\mathbf{v}}_{\rm ce} = -\bar{\mathbf{P}}_{\rm EM}/M$ with respect to the lab frame (in which quantities will be denoted with a superscript *), according to eq. (28). This velocity is in the direction from the resistor to the battery, and its magnitude is such as to counteract the mass transfer from the battery to the resistor, and keep the center of mass/energy of the entire system at rest.

Further discussion of quantities in the lab frame is given in sec. 2.5.

2.4 "Hidden" Momentum in the Cable Frame

The momentum $\mathbf{P}_{\rm EM}$ and $\mathbf{P}_{\rm electrons}$ is a tiny effect of order $1/c^2$, and so not readily noticed. This has led to the term "hidden" momentum, whose meaning has been ambiguous/controversial in the literature [2, 15]-[28], where it is more often applied to a momentum of "matter" than of "fields".

2.4.1 A Definition of "Hidden" Momentum

We now write the macroscopic momentum $\bar{\mathbf{P}}$ of each of the subsystems (or of the whole system) as,

$$\bar{\mathbf{P}} = \frac{U}{c^2}\bar{\mathbf{v}}_{\rm ce} + \bar{\mathbf{P}}_{\rm hidden} - \oint_{\rm boundary} (\mathbf{x} - \bar{\mathbf{x}}_{\rm cm})\,(\bar{\mathbf{p}} - \bar{\rho}\mathbf{v}_b)\cdot d\mathbf{Area}, \tag{32}$$

which defines notion of "hidden" momentum,[13] where $\bar{\mathbf{v}}_{\rm ce} = d\bar{\mathbf{x}}_{\rm ce}/dt$ is the macroscopic center-of-mass/energy velocity of the subsystem, $\bar{\mathbf{p}}$ is its macroscopic momentum density, $\bar{\rho}$ is its macroscopic mass density, and $\mathbf{v}_b$ is the velocity (field) of the boundary. In the present example the boundaries of the subsystems are at infinity,[14] and hence,[15]

$$\bar{\mathbf{P}}_{\rm hidden} = \bar{\mathbf{P}} - \frac{U}{c^2}\bar{\mathbf{v}}_{\rm ce} \qquad \text{(boundary at infinity)}. \tag{33}$$

"Hidden" Electromagnetic Momentum

Using the definition (33), the "hidden" momentum of the electromagnetic field in the cable frame is,

$$\bar{\mathbf{P}}_{\rm hidden,EM} = \bar{\mathbf{P}}_{\rm EM} - \frac{U_{\rm EM}}{c^2}\bar{\mathbf{v}}_{\rm ce,EM} = \mathbf{P}_{\rm EM} - 0 = \frac{I^2 R_0 L}{c^2}\,\hat{\mathbf{z}}, \tag{34}$$

in view of eqs. (14) and (21). For the matter subsystem,

$$\bar{\mathbf{P}}_{\rm hidden,matter} = \bar{\mathbf{P}}_{\rm matter} - M_{\rm matter}\bar{\mathbf{v}}_{\rm ce,matter}, = 0 - \mathbf{P}_{\rm EM} = -\mathbf{P}_{\rm EM}, \tag{35}$$

using eqs. (23) and (25). For the electron subsystem,

$$\bar{\mathbf{P}}_{\rm hidden,electrons} = \bar{\mathbf{P}}_{\rm electrons} - M_{\rm electrons}\bar{\mathbf{v}}_{\rm ce,electrons} = 0 - 0 = 0, \tag{36}$$

using eqs. (26) and (27). The total (macroscopic) hidden momentum is zero in the cable frame,

$$\bar{\mathbf{P}}_{\rm hidden,total} = \bar{\mathbf{P}}_{\rm hidden,EM} + \bar{\mathbf{P}}_{\rm hidden,matter} + \bar{\mathbf{P}}_{\rm hidden,electrons} = 0. \tag{37}$$

[13] This definition was inspired by a private communcation from Daniel Vanzella, as elaborated upon in [29].

[14] See [33] for application of definition (32) in an all-mechanical example with mass flow between two subsystems.

[15] The form (33) was given in eq. (80) of [24], in the excellent approximation that the velocity of the center of mass/energy of the matter/mechanical subsystem is the same as that of the entire system.

2.5 Analysis in the Lab Frame

We define the lab frame to be such that the microscopic (not macroscopic) center of mass/energy is at rest. As noted at the end of sec. 2.3 above, the macroscopic center of mass/energy is also at rest in the lab frame, and the cable frame has velocity,

$$\mathbf{v}^\star_{\rm cable} = -\bar{\mathbf{v}}_{\rm ce} = -\frac{\bar{\mathbf{P}}_{\rm EM}}{M}, \tag{38}$$

with respect to the lab frame.

Denoting quantities in the lab frame with the superscript *, the velocity transformation is (since $\bar{v}_{\rm ce} \ll c$),

$$\mathbf{v}^\star = \mathbf{v} - \bar{\mathbf{v}}_{\rm ce}. \tag{39}$$

In particular, recalling eqs. (22), (26) and (29),[16]

$$\mathbf{v}^\star_{\rm ce,EM} = -\bar{\mathbf{v}}_{\rm ce}, \qquad \mathbf{v}^\star_{\rm ce,matter} = 0, \qquad \mathbf{v}^\star_{\rm ce,electrons} = -\bar{\mathbf{v}}_{\rm ce}. \tag{40}$$

Similarly, the transformation of the (macroscopic) momentum of subsystem i is,

$$\bar{\mathbf{P}}^\star_i = \mathbf{P}_i - M_i \bar{\mathbf{v}}_{\rm ce}, \tag{41}$$

such that, recalling eqs. (23) and (27),

$$\bar{\mathbf{P}}^\star_{\rm EM} = \mathbf{P}_{\rm EM} - M_{\rm EM}\bar{\mathbf{v}}_{\rm ce} \approx \mathbf{P}_{\rm EM}, \tag{42}$$

$$\bar{\mathbf{P}}^\star_{\rm matter} = 0 - M_{\rm matter}\bar{\mathbf{v}}_{\rm ce} \approx -\mathbf{P}_{\rm EM}, \tag{43}$$

$$\bar{\mathbf{P}}^\star_{\rm electrons} = 0 - M_{\rm electrons}\bar{\mathbf{v}}_{\rm ce} \approx 0 - 0 = 0, \tag{44}$$

in that $M_{\rm electrons} \ll M_{\rm matter}$. The total momentum in the lab frame is zero,

$$\bar{\mathbf{P}}^\star_{\rm total} = \bar{\mathbf{P}}^\star_{\rm EM} + \bar{\mathbf{P}}^\star_{\rm matter} + \bar{\mathbf{P}}^\star_{\rm electrons} = 0, \tag{45}$$

as expected for an isolated system whose center of mass/energy is at rest. The "hidden" momenta in the lab frame are,

$$\bar{\mathbf{P}}^\star_{\rm hidden,EM} = \bar{\mathbf{P}}^\star_{\rm EM} - M_{\rm EM}\mathbf{v}^\star_{\rm ce,EM} \approx \mathbf{P}_{\rm EM} - 0 = \mathbf{P}_{\rm EM}, \tag{46}$$

$$\bar{\mathbf{P}}^\star_{\rm hidden,matter} = \bar{\mathbf{P}}^\star_{\rm matter} - M_{\rm matter}\mathbf{v}^\star_{\rm ce,matter} \approx -\mathbf{P}_{\rm EM} - 0 = -\mathbf{P}_{\rm EM}, \tag{47}$$

$$\bar{\mathbf{P}}^\star_{\rm hidden,electrons} = \bar{\mathbf{P}}^\star_{\rm electrons} - M_{\rm electrons}\mathbf{v}^\star_{\rm ce,electrons} \approx 0 - 0 = 0, \tag{48}$$

and the total "hidden" momentum in the lab frame is zero,

$$\bar{\mathbf{P}}^\star_{\rm hidden,total} = \bar{\mathbf{P}}^\star_{\rm hidden,EM} + \bar{\mathbf{P}}^\star_{\rm hidden,matter} + \bar{\mathbf{P}}^\star_{\rm hidden,electrons} = 0. \tag{49}$$

Some people argue that the momentum of the "matter" subsystem in the lab frame is "overt", since $\bar{\mathbf{P}}_{\rm matter}$ is nonzero, while they omit to note that the velocity $\bar{\mathbf{v}}_{\rm ce,matter}$ of the center of mass/energy of this subsystem is zero. That is, while the "hidden" momentum of the matter subsystem is the same in the cable frame and in the lab frame, the contributions from the two terms in each of eqs. (35) and (47) are different.

[16] While the cable moves with velocity $\mathbf{v}^\star_{\rm cable}$ in the lab frame, the mass transfer via electromagnetic-field energy from the battery to the resistor implies that there is an equal-and-opposite contribution to $\mathbf{v}^\star_{\rm ce,matter}$, such that the latter is zero in the lab frame. If $m_{\rm trans}$ is the total mass transferred via the electromagnetic field from the battery to the resistor, the cable (of length L) will have moved distance $m_{\rm trans}L/m_{\rm tot} \ll L$, while the center of mass/energy remains at rest in the lab frame.

3 Comments

3.1 Origin of the Term "Hidden" Momentum

The name "hidden" momentum originated in examples where a permanent (Ampèrian) magnet resides in a static electric field such that electromagnetic momentum,

$$\mathbf{P}_{\rm EM} = \int \frac{\mathbf{S}}{c^2} d{\rm Vol} = \int \frac{\mathbf{E}\times\mathbf{B}}{4\pi c} d{\rm Vol}, \tag{50}$$

is nonzero [2, 15]-[28]. In such examples there is no flow of energy between a source and a sink, and the center of mass/energy of the whole system, as well as those of the electromagnetic fields and the matter, are at rest in the lab frame. The present example extends the set of examples of "hidden" momentum to include a case in which there is a net flow of energy in the (lab) frame where the center of mass/energy is at rest. When this energy flow is associated with an electromagnetic field there can be "hidden" momentum.[17]

3.2 An Alternative Expression for "Hidden" Momentum

The "hidden" momentum (of a subsystem, according to definition (32)) can also be written as [29],

$$\bar{\mathbf{P}}_{\rm hidden} = -\int \frac{f^0}{c}(\mathbf{x} - \bar{\mathbf{x}}_{\rm ce})\, d{\rm Vol}, \tag{51}$$

where,

$$f^\mu = \frac{\partial T^{\mu\nu}}{\partial x^\nu} \tag{52}$$

is the 4-force density exerted on the subsystem by on all other subsystems, and $T^{\mu\nu}$ is the stress-energy-momentum tensor of the subsystem.[18]

The (Lorentz) 4-force density of the electromagnetic field acting on the charged matter has time component $\mathbf{E}\cdot\mathbf{J}/c$, which is nonzero only inside the battery and the resistor in the present example. There, the electric field is $\mathbf{E} = IR_0\,\hat{\mathbf{r}}/r\ln(b/a)$, where $\mathbf{r}$ is the radial vector in a cylindrical coordinate system, and the current density is $\mathbf{J} = \pm I\,\hat{\mathbf{r}}/2\pi r\Delta$, with the $-$ sign inside the battery (at $z=0$) and the $+$ sign inside the resistor (at $z=L$), each of whom is taken to have thickness Δ along z. Thus, eq. (51) leads to,

$$\bar{\mathbf{P}}_{\rm hidden,matter} = -\frac{I^2 R_0 L}{c^2}\,\hat{\mathbf{z}} = -\bar{\mathbf{P}}_{\rm EM}. \tag{53}$$

[17] for a case in which the energy flow is associated with mass transport see [34], and for an example with mass transfer via a sound wave see [35].

[18] For an isolated, closed system with total stress-energy-momentum tensor $T^{\mu\nu}$, the 4-divergence of the latter is zero, $\partial T^{\mu\nu}/\partial x^\nu = 0$. If the system contains two subsystems A and B then $f^\mu_A = \partial T^{\mu\nu}_A/\partial x^\nu = -\partial T^{\mu\nu}_B/\partial x^\nu = -f^\mu_B$, where f^μ_A is the 4-force density exerted by subsystem B on A.

For the electromagnetic subsystem, the top row of the stress-energy-momentum tensor has the form $T^{0\mu}_{\rm EM} = (u_{\rm EM}, c\,\mathbf{p}_{\rm EM}) = (u_{\rm EM}, \mathbf{S}/c)$, and $\mathbf{S}$ is the Poynting vector. Thus, $f^0_{\rm EM} = \partial u_{\rm EM}/\partial ct + \boldsymbol{\nabla}\cdot\mathbf{S}/c = \partial u_{\rm EM}/\partial ct - \partial u_{\rm EM}/\partial ct - \mathbf{J}\cdot\mathbf{E}/c = -\mathbf{J}\cdot\mathbf{E}/c$, and,

$$\bar{\mathbf{P}}_{\rm hidden,EM} = \int \frac{\mathbf{J}\cdot\mathbf{E}}{c^2}\,(\mathbf{x} - \bar{\mathbf{x}}_{\rm ce,EM})\,d{\rm Vol} = \frac{I^2 R_0 L}{c^2}\,\hat{\mathbf{z}} = \bar{\mathbf{P}}_{\rm EM}. \tag{54}$$

3.3 On the Microscopic Nature of Electrical Currents

The notion of electrical currents as consisting of moving electric charges is a key feature of microscopic electrodynamics. In, say, copper wires, the number of conduction electrons is two per atom, so the characteristic spacing between conduction electrons is an atomic radius. As such, a quantum description of the conduction electrons is more appropriate than a classical approximation of them as moving point charges.

The quantum wave function of each conduction electron carrier has characteristic size of an atom, so the effective density of the conduction electrons is continuous, rather than discrete as for a collection of point charges. This quantum feature is consistent with the Maxwellian view that charge and current densities associated with conductors are continuous in classical electrodynamics.

Furthermore, the interior of an electrical conductor is electrically neutral to a very good approximation,[19] with the implication that there exist continuous densities of both positive and negative charges that overlap one another. The interactions between the constituent charges that would exist in the approximation of point particles do not exist inside electrically neutral conductors.[20] Such interactions were tacitly neglected in the macroscopic analysis of sec. 2 above.

References

[1] A. Sommerfeld, *Electrodynamics* (Academic Press, New York, 1952),
http://kirkmcd.princeton.edu/examples/EM/sommerfeld_em_52.pdf
http://kirkmcd.princeton.edu/examples/EM/sommerfeld_em_52_sec17.pdf

[2] D.J. Griffiths, *Introduction to Electrodynamics*, 3rd ed. (Prentice Hall, 1999),
http://kirkmcd.princeton.edu/examples/EM/griffiths_em3.pdf

[19] Resistive, current-carrying electrical conductors are not precisely neutral, but have a net negative charge density of order $1/c^2$. See, for example, [36].

[20] Hence, a recent claim [30] is bogus that past analyses of "hidden" momentum in electromagnetic were wrong because they neglected the interactions among the point charge carriers of the current. In particular, the electromagnetic momentum $\mathbf{P}_{\rm EM,charges} = \sum_i q_i \mathbf{A}_i/c$ associated with charges q_i inside the conductor is zero as the conductor is electrically neutral and better described as have continuous rather than discrete charges: $\mathbf{P}_{\rm EM,charges} = \int \rho\mathbf{A}/c = 0$ since the total charge density is zero inside a resistive conductor.

Of course, in examples such as an electron storage ring or a vacuum tube, where only electrons comprise the current (and their spacing is typically large compared to an atom), such the electron-electron (space-charge) interactions should not be neglected.

[3] O. Heaviside, *Electromagnetic Induction and its Propagation*, XXXV, Electrician **18**, 211 (1887), http://kirkmcd.princeton.edu/examples/EM/heaviside_electrician_18_211_87.pdf
See also pp. 94-95 of [4].

[4] O. Heaviside, *Electrical Papers*, vol. 2 (Macmillan, 1894),
http://kirkmcd.princeton.edu/examples/EM/heaviside_electrical_papers_2.pdf

[5] W.S. Franklin and B. MacNutt, *Advanded Theory of Electricity and Magnetism* (Macmillan (Franklin & Charles), 1914),
http://kirkmcd.princeton.edu/examples/EM/franklin_macnutt_adv_electricity.pdf

[6] A. Marcus, *The Electric Field Associated with a Steady Current in Long Cylindrical Conductor*, Am. J. Phys. **9**, 225 (1941),
http://kirkmcd.princeton.edu/examples/EM/marcus_ajp_9_225_41.pdf

[7] B.R. Russell, *Surface Charges on Conductors Carrying Steady Currents*, Am. J. Phys. **36**, 527 (1968), http://kirkmcd.princeton.edu/examples/EM/russell_ajp_36_527_68.pdf

[8] C. Schaefer, *Electrodynamik und Optik* (De Gruyter, 1932),
http://kirkmcd.princeton.edu/examples/EM/schaefer_32_sec29.pdf

[9] K.T. McDonald, *Little's Paradox*, (April 21, 2017),
http://kirkmcd.princeton.edu/examples/little.pdf

[10] M. Boulé, *DC power transported by two infinite parallel wires*, Am. J. Phys. **92**, 14 (2024), http://kirkmcd.princeton.edu/examples/EM/boule_ajp_92_14_24.pdf

[11] W. Weber, *Werke*, Vol. 3 (Springer, Berlin, 1893),
http://kirkmcd.princeton.edu/examples/EM/weber_werke_v3.pdf

[12] A.K.T. Assis and J.A. Hernandes, *The Electric Force of a Current* (Aperion, Montreal, 2007), http://kirkmcd.princeton.edu/examples/EM/assis_electric_force_07.pdf

[13] A. Einstein, *Ist die Trägheit eines Körpers von seinem Energieinhalt abhängig?*, Ann. Phys. **18**, 639 (1905), http://kirkmcd.princeton.edu/examples/EM/einstein_ap_18_639_05.pdf
Translation: *Does the Inertia of a Body Depend upon its Energy-Content?*,
http://kirkmcd.princeton.edu/examples/EM/einstein_ap_18_639_05_english.pdf

[14] T.H. Boyer, *Concerning hidden momentum*, Am. J. Phys. **76**, 190 (2008),
http://kirkmcd.princeton.edu/examples/EM/boyer_ajp_76_190_08.pdf

[15] W. Shockley and R.P. James, *"Try Simplest Cases" Discovery of "Hidden Momentum" Forces on "Magnetic Currents"*, Phys. Rev. Lett. **18**, 876 (1967),
http://kirkmcd.princeton.edu/examples/EM/shockley_prl_18_876_67.pdf
W. Shockley, *"Hidden Linear Momentum" Related to the* $\boldsymbol{\alpha}\cdot\mathbf{E}$ *Term for a Dirac-Electron Wave Packet in an Electric Field*, Phys. Rev. Lett. **20**, 343 (1968),
http://kirkmcd.princeton.edu/examples/EM/shockley_prl_20_343_68.pdf

[16] S. Coleman and J.H. Van Vleck, *Origin of "Hidden Momentum" Forces on Magnets*, Phys. Rev. **171**, 1370 (1968), http://kirkmcd.princeton.edu/examples/EM/coleman_pr_171_1370_68.pdf

[17] P. Penfield, Jr. and H.A. Haus, *Electrodynamics of Moving Media*, p. 215 (MIT, 1967), kirkmcd.princeton.edu/examples/EM/penfield_haus_chap7.pdf

[18] O. Costa de Beauregard, *A New Law in Electrodynamics*, Phys. Lett. **24A**, 177 (1967), http://kirkmcd.princeton.edu/examples/EM/costa_de_beauregard_pl_24a_177_67.pdf
Physical Reality of Electromagnetic Potentials?, Phys. Lett. **25A**, 375 (1967), http://kirkmcd.princeton.edu/examples/EM/costa_de_beauregard_pl_25a_375_67.pdf
"Hidden Momentum" in Magnets and Interaction Energy, Phys. Lett. **28A**, 365 (1968), http://kirkmcd.princeton.edu/examples/EM/costa_de_beauregard_pl_28a_365_68.pdf

[19] H.A. Haus and P. Penfield Jr, *Forces on a Current Loop*, Phys. Lett. **26A**, 412 (1968), http://kirkmcd.princeton.edu/examples/EM/penfield_pl_26a_412_68.pdf

[20] W.H. Furry, *Examples of Momentum Distributions in the Electromagnetic Field and in Matter*, Am. J. Phys. **37**, 621 (1969), http://kirkmcd.princeton.edu/examples/EM/furry_ajp_37_621_69.pdf

[21] M.G. Calkin, *Linear Momentum of the Source of a Static Electromagnetic Field*, Am. J. Phys. **39**, 513-516 (1971), http://kirkmcd.princeton.edu/examples/EM/calkin_ajp_39_513_71.pdf

[22] L. Vaidman, *Torque and force on a magnetic dipole*, Am. J. Phys. **58**, 978 (1990), http://kirkmcd.princeton.edu/examples/EM/vaidman_ajp_58_978_90.pdf

[23] D.J. Griffiths, *Dipoles at rest*, Am. J. Phys. **60**, 979 (1992), http://kirkmcd.princeton.edu/examples/EM/griffiths_ajp_60_979_92.pdf

[24] V. Hnizdo, *Hidden momentum and the electromagnetic mass of a charge and current carrying body*, Am. J. Phys. **65**, 55 (1997), http://kirkmcd.princeton.edu/examples/EM/hnizdo_ajp_65_55_97.pdf

[25] V. Hnizdo, *Hidden momentum of a relativistic fluid in an external field*, Am. J. Phys. **65**, 92 (1997), http://kirkmcd.princeton.edu/examples/EM/hnizdo_ajp_65_92_97.pdf
Hidden mechanical momentum and the field momentum in stationary electromagnetic and gravitational systems, Am. J. Phys. **65**, 515 (1997), http://kirkmcd.princeton.edu/examples/EM/hnizdo_ajp_65_515_97.pdf
Covariance of the total energy-momentum four-vector of a charge and current carrying macroscopic body, Am. J. Phys. **66**, 414 (1998), http://kirkmcd.princeton.edu/examples/EM/hnizdo_ajp_66_414_98.pdf
On linear momentum in quasistatic electromagnetic systems (July 6, 2004), http://arxiv.org/abs/physics/0407027

[26] E. Comay, *Exposing "hidden momentum"*, Am. J. Phys. **64**, 1028 (1996), http://kirkmcd.princeton.edu/examples/EM/comay_ajp_64_1028_96.pdf
Lorentz transformation of a system carrying Hidden Momentum, Am. J. Phys. **68**, 1007 (2000), http://kirkmcd.princeton.edu/examples/EM/comay_ajp_68_1007_00.pdf

[27] T.H. Boyer, *Connecting linear momentum and energy for electromagnetic systems*, Am. J. Phys. **74**, 742 (2006), http://kirkmcd.princeton.edu/examples/EM/boyer_ajp_74_742_06.pdf
Interaction of a point charge and a magnet: Comments on hidden mechanical momentum due to hidden nonelectromagnetic forces, http://arxiv.org/abs/0708.3367

[28] D. Babson *et al.*, *Hidden momentum, field momentum, and electromagnetic impulse*, Am. J. Phys. **77**, 826 (2009), http://kirkmcd.princeton.edu/examples/EM/babson_ajp_77_826_09.pdf

[29] K.T. McDonald, *On the Definition of "Hidden" Momentum* (July 9, 2012), http://kirkmcd.princeton.edu/examples/hiddendef.pdf

[30] T.H. Boyer, *Interaction of a magnet and a point charge: Unrecognized internal electromagnetic momentum*, Am. J. Phys. **83**, 433 (2015), http://kirkmcd.princeton.edu/examples/EM/boyer_ajp_83_433_15.pdf

[31] K.T. McDonald, *"Hidden" Momentum in a Current Loop*, (June 30, 2012), http://kirkmcd.princeton.edu/examples/penfield.pdf

[32] J.C. Maxwell, *A Dynamical Theory of the Electromagnetic Field*, Phil. Trans. Roy. Soc. London **155**, 459 (1865), http://kirkmcd.princeton.edu/examples/EM/maxwell_ptrsl_155_459_65.pdf

[33] K.T. McDonald, *"Hidden" Momentum in an Oscillating Tube of Water?* (June 24, 2012), http://kirkmcd.princeton.edu/examples/utube.pdf

[34] K.T. McDonald, *"Hidden" Momentum in Link of a Moving Chain?* (June 28, 2012), http://kirkmcd.princeton.edu/examples/link.pdf

[35] K.T. McDonald, *"Hidden" Momentum in a Sound Wave?* (Oct. 31, 2007), http://kirkmcd.princeton.edu/examples/hidden_sound.pdf

[36] K.T. McDonald, *Charge Density in a Current-Carrying Wire*, (Dec. 10, 2010), http://kirkmcd.princeton.edu/examples/wire.pdf